Non-invasive ultrasonic flow and temperature measurement

Permanently installed clamp-on measuring system for water and wastewater pipes

Features

- Highly accurate non-invasive flow and temperature measurement irrespective of the flow direction (bidirectional), with outstanding measurement dynamics, excellent zero-point stability and high repeatability of the measurement results
- Submersible ultrasonic transducers (IP68) provide a reliable and durable solution for flow measurement on buried pipes or for applications where the measuring point can be overflowed
- Simple retrofitting on existing water networks without interruption of supply and disposal and without the need for shaft construction and pipe intrusion, thus saving time and cost

Applications

- Flow and temperature measurement on buried water and wastewater pipes
- Flow and temperature measurement on water and wastewater pipes which can be overflowed

FLUXUS WD

Variofix C

Function

Measurement principle

The transducers are mounted on the pipe which is completely filled with the fluid. The ultrasonic signals are emitted alternately by a transducer and received by the other. The physical quantities are determined from the transit times of the ultrasonic signals.

Path of the ultrasonic signal in the flowing fluid

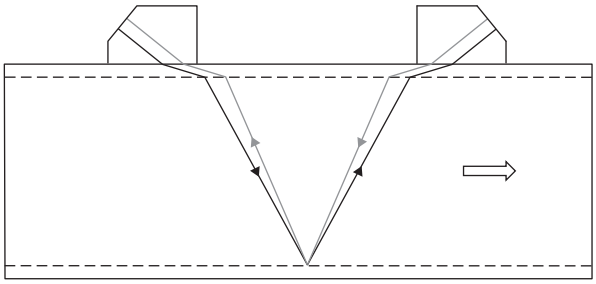

Transit time difference principle

As the fluid where the ultrasound propagates is flowing, the transit time of the ultrasonic signal in flow direction is shorter than the one against the flow direction.

The transit time difference Δt is measured and allows the flowmeter to determine the average flow velocity along the propagation path of the ultrasonic signals. A flow profile correction is then performed in order to obtain the area averaged flow velocity, which is proportional to the volumetric flow rate.

The integrated microprocessors control the entire measuring cycle. The received ultrasonic signals are checked for measurement usability and evaluated for their reliability. Noise signals are eliminated.

Transit time difference Δt

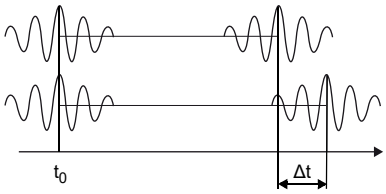

HybridTrek

If the gaseous or solid content in the fluid increases occasionally during measurement, a measurement with the transit time difference principle is no longer possible. NoiseTrek mode will then be selected by the flowmeter. This measurement method allows the flowmeter to achieve a stable measurement even with high gaseous or solid content.

The transmitter automatically toggles between the TransitTime and the NoiseTrek mode without having to change the measuring setup.

Calculation of volumetric flow rate

$$\dot{V} = k_{Re} \cdot A \cdot k_a \cdot \frac{\Delta t}{2 \cdot t_\gamma}$$

where

$\dot{V}$	-	volumetric flow rate
k_{Re}	-	fluid mechanics calibration factor
A	-	cross-sectional pipe area
k_a	-	acoustical calibration factor
Δt	-	transit time difference
t_γ	-	average of transit times in the fluid

Calculation of sound speed and fluid temperature

The fluid sound speed can be determined from the transit times in the fluid and the geometry of the measuring point. The sound speed is fluid specific and temperature dependent. This curve is stored in the fluid data set for water. Thus, the fluid temperature can be determined from the sound speed.

Number of sound paths

The number of sound paths is the number of transits of the ultrasonic signal through the fluid in the pipe. Depending on the number of sound paths, the following methods of installation exist:

- **reflection arrangement**
  The number of sound paths is even. The transducers are mounted on the same side of the pipe. Correct positioning of the transducers is easy.
- **diagonal arrangement**
  The number of sound paths is odd. The transducers are mounted on opposite sides of the pipe. In the case of a high signal attenuation by the fluid, pipe and coatings, diagonal arrangement with 1 sound path will be used.

The preferred method of installation depends on the application. While increasing the number of sound paths increases the accuracy of the measurement, signal attenuation increases as well. The optimum number of sound paths for the parameters of the application will be determined automatically by the transmitter.

As the transducers can be mounted with the transducer mounting fixture in reflection arrangement or diagonal arrangement, the number of sound paths can be adjusted optimally for the application.

Reflection arrangement, number of sound paths: 2

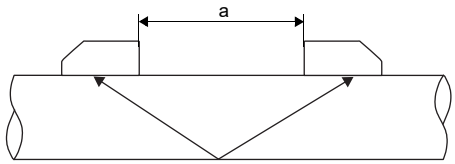

Diagonal arrangement, number of sound paths: 3

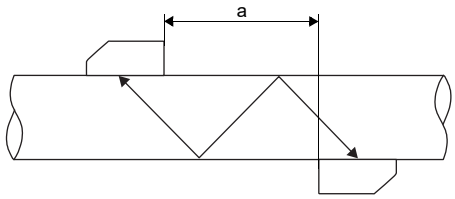

Diagonal arrangement, number of sound paths: 1

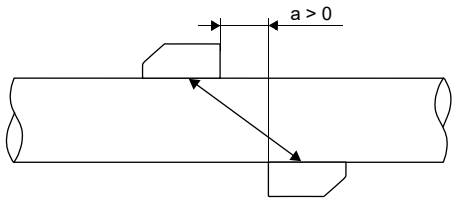

Diagonal arrangement, number of sound paths: 1, negative transducer distance

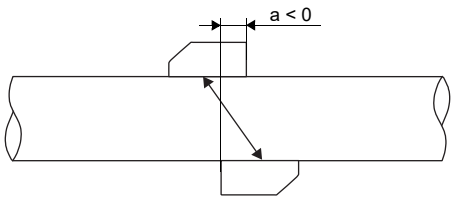

a - transducer distance

Transmitter

Technical data

		FLUXUS WD	FLUXUS WD Extended
			
design		standard field device	standard field device with inputs
application		flow measurement on 1 water pipe	flow measurement on 1 or 2 water pipes
transducers		WD6500: CDG1LI8 or CDG1N52 WD1200: CDK1LI8 or CDK1N52 WD400: CDM2LI8 or CDM2N52	
measurement			
measurement principle		transit time difference correlation principle, automatic NoiseTrek selection for measurements with high gaseous or solid content	
Flussrichtung		bidirektional	
flow velocity	m/s	0.01...25	
repeatability		0.15 % MV ±0.005 m/s	
fluid		water	
temperature compensation		corresponding to the recommendations in ANSI/ASME MFC-5.1-2011	
measurement uncertainty (volumetric flow rate)			
measurement uncertainty of the measuring system[1]		±0.3 % MV ±0.005 m/s	
measurement uncertainty at the measuring point[2]		±1 % MV ±0.005 m/s	
measurement uncertainty (temperature aus Schallgeschwindigkeit)			
measurement uncertainty at the measuring point[2]		±0.2 K (fluid temperature: 0...30 °C, inner pipe diameter: min. 200 mm)	
transmitter			
power supply		• 100...230 V/50...60 Hz or • 20...32 V DC or • 11...16 V DC	
power consumption	W	< 15	
number of measuring channels		1, optional: 2	2
damping	s	0...100 (adjustable)	
measuring cycle	Hz	100...1000 (1 channel)	
response time	s	1 (1 channel), option: 0.02	
housing material		aluminum, powder coated or stainless steel 316L (1.4404)	
degree of protection		IP66	
dimensions	mm	see dimensional drawing	
weight	kg	aluminum housing: 5.4 stainless steel housing: 5.1	
fixation		wall mounting, optional: 2" pipe mounting	
ambient temperature	°C	-40...+60 (< -20 without operation of the display)	
display		128 x 64 pixels, backlight	
menu language		English, German, French, Spanish, Dutch, Russian, Polish, Turkish, Italian	
measuring functions			
physical quantities		volumetric flow rate, mass flow rate, flow velocity	
totaliser		volume, mass	
calculation functions		average, difference, sum (2 measuring channels necessary)	
diagnostic functions		sound speed, fluid temperature, signal amplitude, SNR, SCNR, standard deviation of amplitudes and transit times	
communication interfaces			
service interfaces		measured value transmission, parametrisation of the transmitter: • USB • LAN	
process interfaces		max. 1 option: • RS485 (ASCII sender) • Modbus RTU • BACnet MS/TP • M-Bus • HART • Profibus PA • FF H1 • Modbus TCP • BACnet IP	

[1] with aperture calibration of the transducers

[2] for transit time difference principle and reference conditions

		FLUXUS WD	FLUXUS WD Extended
accessories			
data transmission kit		USB cable	
software		• FluxDiagReader: reading of measured values and parameters, graphical presentation • FluxDiag (optional): reading of measurement data, graphical presentation, report generation, parametrisation of the transmitter	
data logger			
loggable values		all physical quantities, totalised physical quantities and diagnostic values	
capacity		max. 800 000 measured values	
outputs			
		The outputs are galvanically isolated from the transmitter.	
number		• switchable current output: 2 or (1 and HART) • digital output: 2	• switchable current output: 4 or (2 and HART) • digital output: 3
• switchable current output			
range	mA	4...20 (3.2...22)	
accuracy		0.04 % MV ±3 µA	
active output		R_{ext} < 250 Ω	
passive output		U_{ext} = 8...30 V, depending on R_{ext} (R_{ext} < 1 kΩ at 30 V)	
• HART			
range	mA	4...20	
accuracy		0.1 % MV ±15 µA	
active output		U_{int} = 24 V, R_{ext} < 500 Ω	
• digital output			
functions		• frequency output • binary output • pulse output	
number		3	
operating parameters		5...30 V/< 100 mA	
frequency output • range	 kHz	 0...5	
binary output • binary output as alarm output		 limit, change of flow direction or error	
pulse output • functions • pulse value • pulse width	 units ms	 mainly for totalising 0.01...1000 0.05...1000	
inputs			
		The inputs are galvanically isolated from the transmitter.	
• current input			
number		-	2
accuracy		-	0.1 % MV ±10 µA
active input • range	 mA	- -	U_{int} = 24 V, R_{int} = 50 Ω, P_{int} < 0.5 W, not short-circuit proof 0...20
passive input • range	 mA	- -	R_{int} = 50 Ω, P_{int} < 0.3 W -20...+20

[1] with aperture calibration of the transducers

[2] for transit time difference principle and reference conditions

Dimensions

aluminum housing

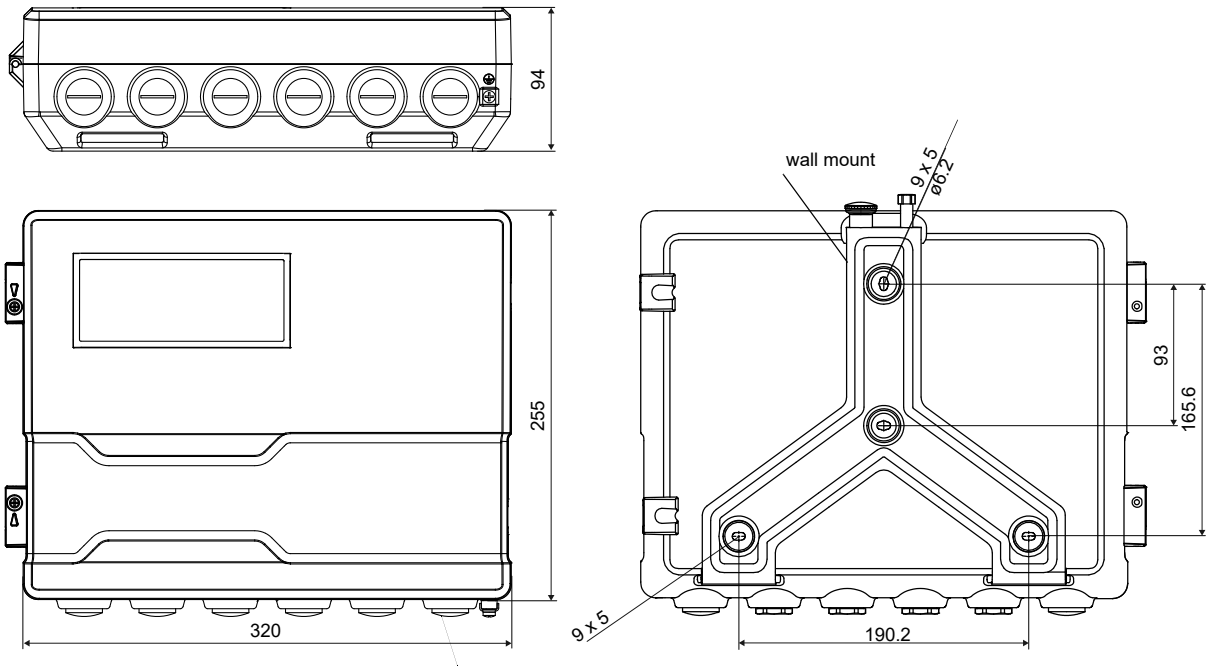

in mm

stainless steel housing

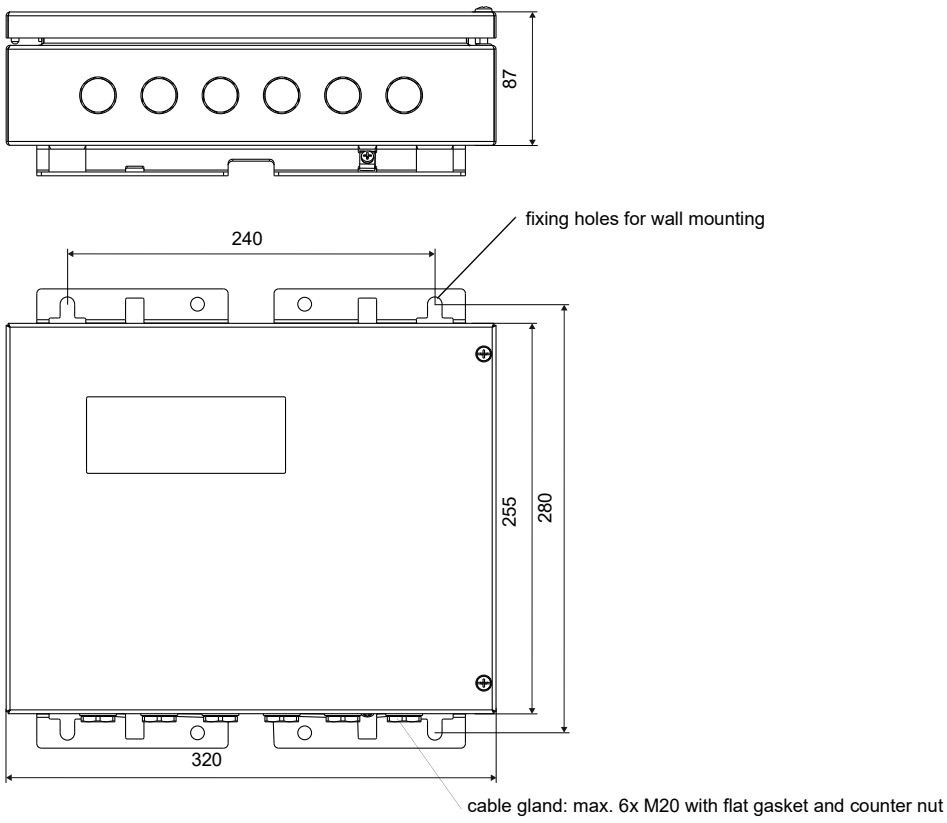

in mm

2" pipe mounting kit

aluminum housing 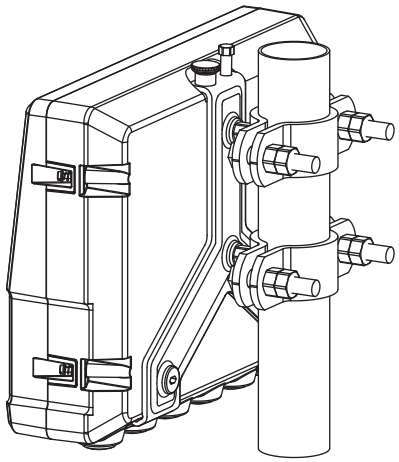	item number: 721037-4
stainless steel housing 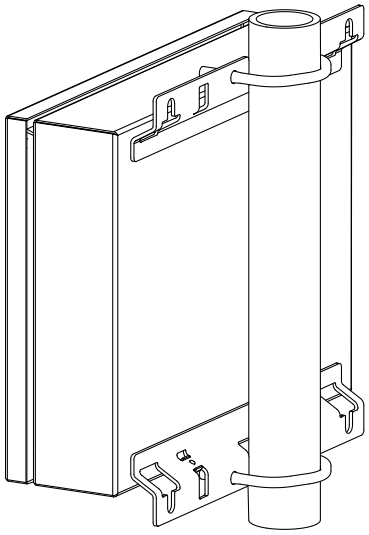	item number: 721110-4

Terminal assignment

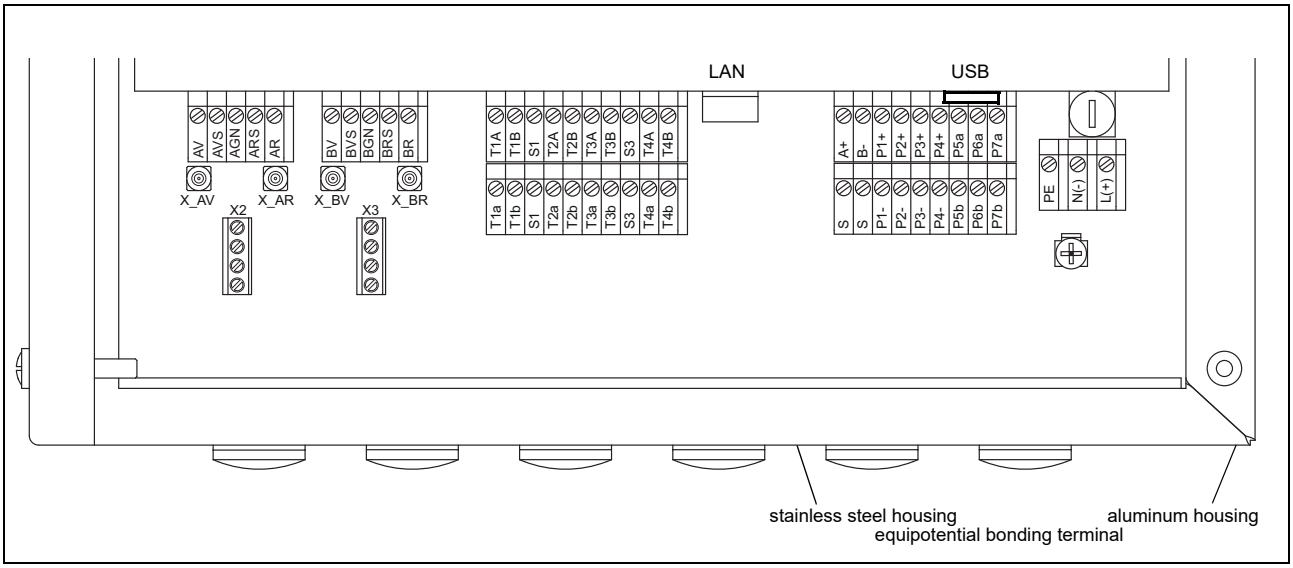

power supply[1]		
terminal	**connection (AC)**	**connection (DC)**
PE	protective earth	protective earth
N(-)	xxx	-
L(+)	outer conductor	+

transducers, extension cable				
measuring channel A		**measuring channel B**		**transducer**
terminal	**connection**	**terminal**	**connection**	
AV	signal	BV	signal	
AVS	internal shield	BVS	internal shield	
ARS	internal shield	BRS	internal shield	
AR	signal	BR	signal	

outputs[1]				
terminal	**connection**	**terminal**	**connection**	**communication interface**
P1+...P4+ P1-...P4-	current output, HART (P1)	A+	signal +	• RS485[1] • Modbus RTU[1] • BACnet MS/TP[1] • M-Bus[1] • Profibus PA[1] • FF H1[1]
		B-	signal -	
P5a...P7a P5b...P7b	digital output	S	shield	
		USB	type B Hi-Speed USB 2.0 Device	• service (FluxDiag/ FluxDiagReader)
		LAN	RJ45 10/100 Mbps Ethernet	• service (FluxDiag/ FluxDiagReader) • Modbus TCP • BACnet IP

[1] cable (by customer):
- e.g. flexible wires, with insulated wire ferrules, wire cross-section: 0.25...2.5 mm^2
- outer diameter of the cable (stainless steel housing, with ferrite nut): max. 7.6 mm

Transducers

Transducer selection

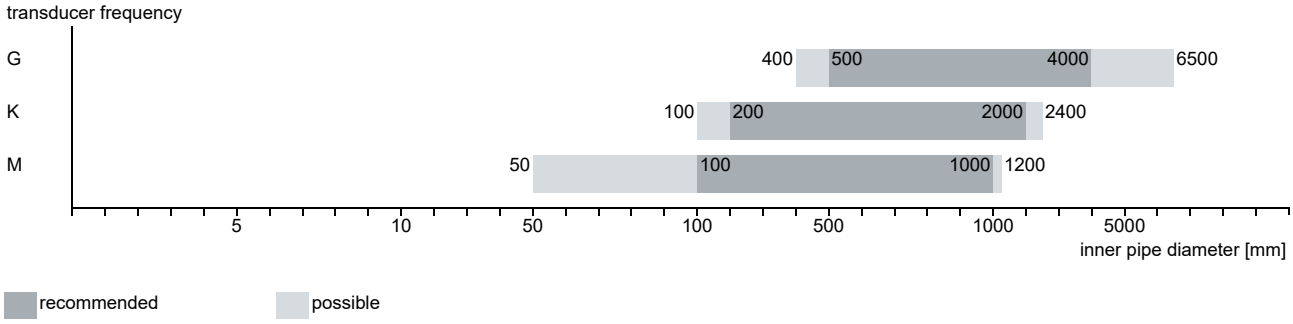

Technical data

Shear wave transducers

technical type		CDG1N52	CDK1N52	CDM2N52
transducer frequency	MHz	0.2	0.5	1
inner pipe diameter d				
min. extended	mm	400	100	50
min. recommended	mm	500	200	100
max. recommended	mm	4000	2000	1000
max. extended	mm	6500	2400	1200
pipe wall thickness				
min.	mm	11	5	2.5
material				
housing		PEEK with stainless steel cover 316L (1.4404)	PEEK with stainless steel cover 316L (1.4404)	PEEK with stainless steel cover 316L (1.4404)
contact surface		PEEK	PEEK	PEEK
degree of protection		IP66	IP66	IP66/IP67
transducer cable				
type		1699	1699	1699
length	m	5	5	4
dimensions				
length l	mm	129.5	126.5	64
width b	mm	51	51	32
height h	mm	67	67.5	40.5
dimensional drawing		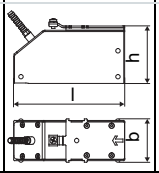	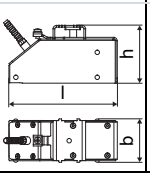	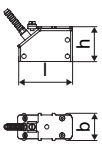
weight (without cable)	kg	0.47	0.36	0.066
pipe surface temperature	°C	-40...+130	-40...+130	-40...+130
ambient temperature	°C	-40...+130	-40...+130	-40...+130
temperature compensation		x	x	x

Shear wave transducers (IP68)

technical type		CDG1LI8	CDK1LI8	CDM2LI8
transducer frequency	MHz	0.2	0.5	1
inner pipe diameter d				
min. extended	mm	400	100	50
min. recommended	mm	500	200	100
max. recommended	mm	4000	2000	1000
max. extended	mm	6500	2400	1200
pipe wall thickness				
min.	mm	11	5	2.5
material				
housing		PEEK with stainless steel cover 316Ti (1.4571)	PEEK with stainless steel cover 316Ti (1.4571)	PEEK with stainless steel cover 316Ti (1.4571)
contact surface		PEEK	PEEK	PEEK
degree of protection		IP68[1]	IP68[1]	IP68[1]
transducer cable				
type		2550	2550	2550
length	m	12	12	12
dimensions				
length l	mm	130	130	72
width b	mm	54	54	32
height h	mm	83.5	83.5	46
dimensional drawing		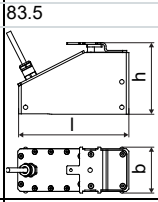	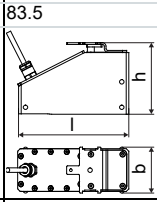	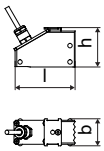
weight (without cable)	kg	0.43	0.43	0.085
pipe surface temperature	°C	-40...+100	-40...+100	-40...+100
ambient temperature	°C	-40...+100	-40...+100	-40...+100
temperature compensation		x	x	x

[1] test conditions: 3 months/2 bar (20 m)/20 °C

Transducer mounting fixture

Variofix L (VLK, VLM) 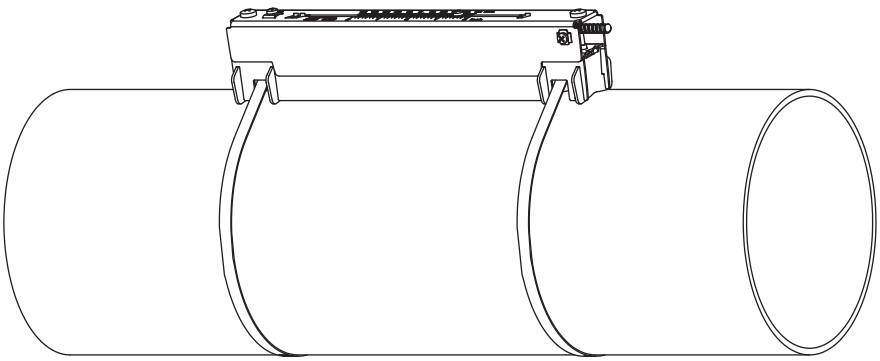	material: stainless steel 316Ti (1.4571), 316L (1.4404), 17-7PH (1.4568) inner length: **VLK**: 348 mm, option IP68: 368 mm **VLM**: 234 mm dimensions: **VLK**: 423 x 90 x 93 mm option IP68: 443 x 94 x 105 mm **VLM**: 309 x 57 x 63 mm
Variofix C (VCK, VCM) 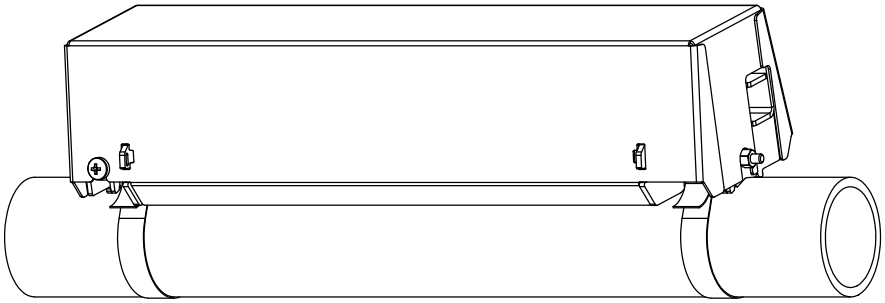	material: stainless steel 316Ti (1.4571) inner length: **VCK-*S**: 350 mm **VCM**: 400 mm dimensions: **VCK-*S**: 410 x 126 x 125 mm **VCM**: 460 x 96 x 82 mm

Coupling materials for transducers

type	ambient temperature °C
coupling foil type VT	-10...+200

Connection systems

connection system TS		
connection with extension cable	direct connection	transducers technical type
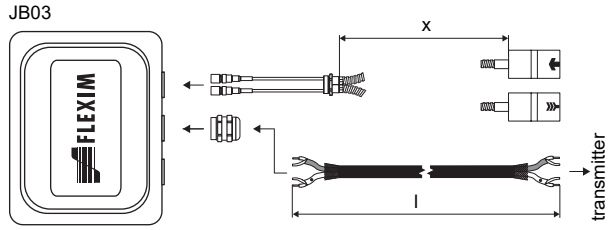	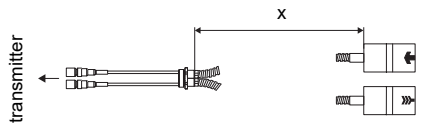	*****52
connection system T1		
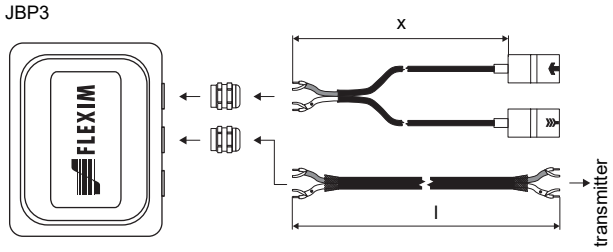	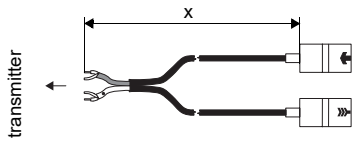	****LI*

Cable

transducer cable			
type		**1699**	**2550**
weight	kg/m	0.094	0.035
ambient temperature	°C	-55...+200	-40...+100
properties			longitudinal watertight
cable jacket			
material		PTFE	PUR
outer diameter	mm	2.9	5.2 ±0.2
thickness	mm	0.3	0.9
colour		brown	grey
shield		x	x
sheath			
material		stainless steel 316Ti (1.4571)	-
outer diameter	mm	8	-

extension cable			
type		**2615**	**5245**
weight	kg/m	0.18	0.38
ambient temperature	°C	-30...+70	-30...+70
properties		halogen free fire propagation test according to IEC 60332-1 combustion test according to IEC 60754-2	halogen free fire propagation test according to IEC 60332-1 combustion test according to IEC 60754-2
cable jacket			
material		PUR	PUR
outer diameter	mm	max. 12	max. 12
thickness	mm	2	2
colour		black	black
shield		x	x
sheath			
material		-	steel wire braid with copolymer sheath
outer diameter	mm	-	max. 15.5

Cable length

transducer frequency		**F, G, H, K**		**M, P**		**Q**		**S**	
connection system TS									
transducers technical type		x	l	x	l	x	l	x	l
*D***5*	m	5	≤ 300	4	≤ 300	3	≤ 90	2	≤ 40
****LI*	m	12	≤ 300	12	≤ 300	-	-	-	-

x - transducer cable length

l - max. length of extension cable (depending on the application)

Junction box

Technical data

JB03

weight	kg	1.2 kg
fixation		wall mounting optional: 2" pipe mounting
material		
housing		stainless steel 316L (1.4404)
gasket		silicone
degree of protection		IP66/IP67
ambient temperature		
min.	°C	-40
max.	°C	+80

Connection

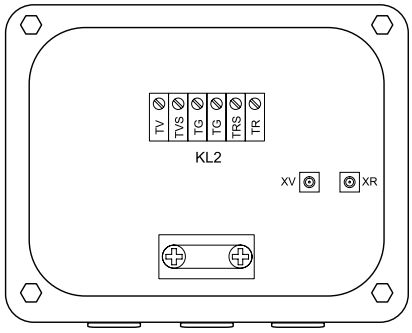

Transducers

	terminal	connection	transducer
	XV	SMB connector	
	XR	SMB connector	

Extension cable

terminal strip	terminal	connection
KL2	TV	signal
	TVS	internal shield
	TRS	internal shield
	TR	signal

JBP3

weight	kg	1.2 kg
fixation		wall mounting optional: 2" pipe mounting
material		
housing		stainless steel 316L (1.4404)
gasket		silicone
degree of protection		IP67
ambient temperature		
min.	°C	-40
max.	°C	+80

Connection

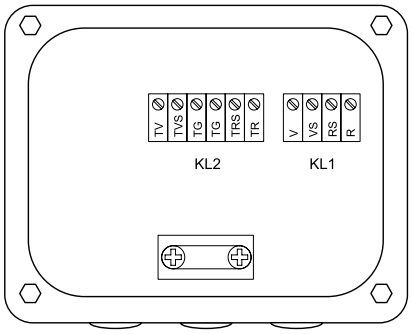

Transducers

terminal strip	terminal	connection	transducer
KL1	V	signal	
	VS	internal shield	
	RS	internal shield	
	R	signal	

Extension cable

terminal strip	terminal	connection
KL2	TV	signal
	TVS	internal shield
	TRS	internal shield
	TR	signal

Dimensions

JB0*, JBP*

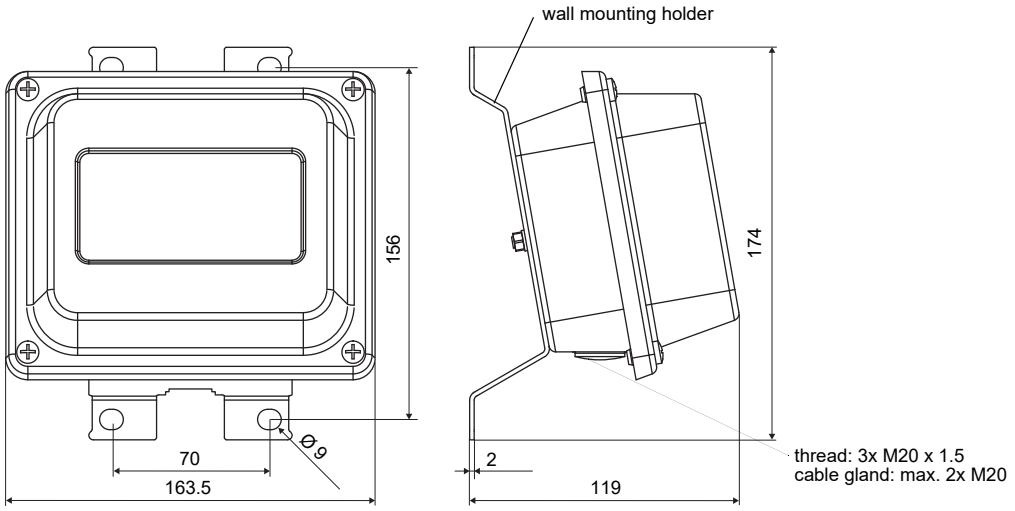

in mm

2" pipe mounting kit

JB**

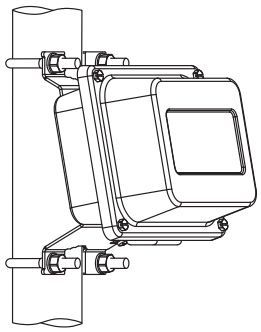

item number: 751035-2

FLEXIM GmbH
Boxberger Str. 4
12681 Berlin
Germany
Tel.: +49 (30) 93 66 76 60
Fax: +49 (30) 93 66 76 80

internet: www.flexim.com
e-mail: info@flexim.com

2023-06-12, TSFLUXUS_WDV2-7-2EN_Leu